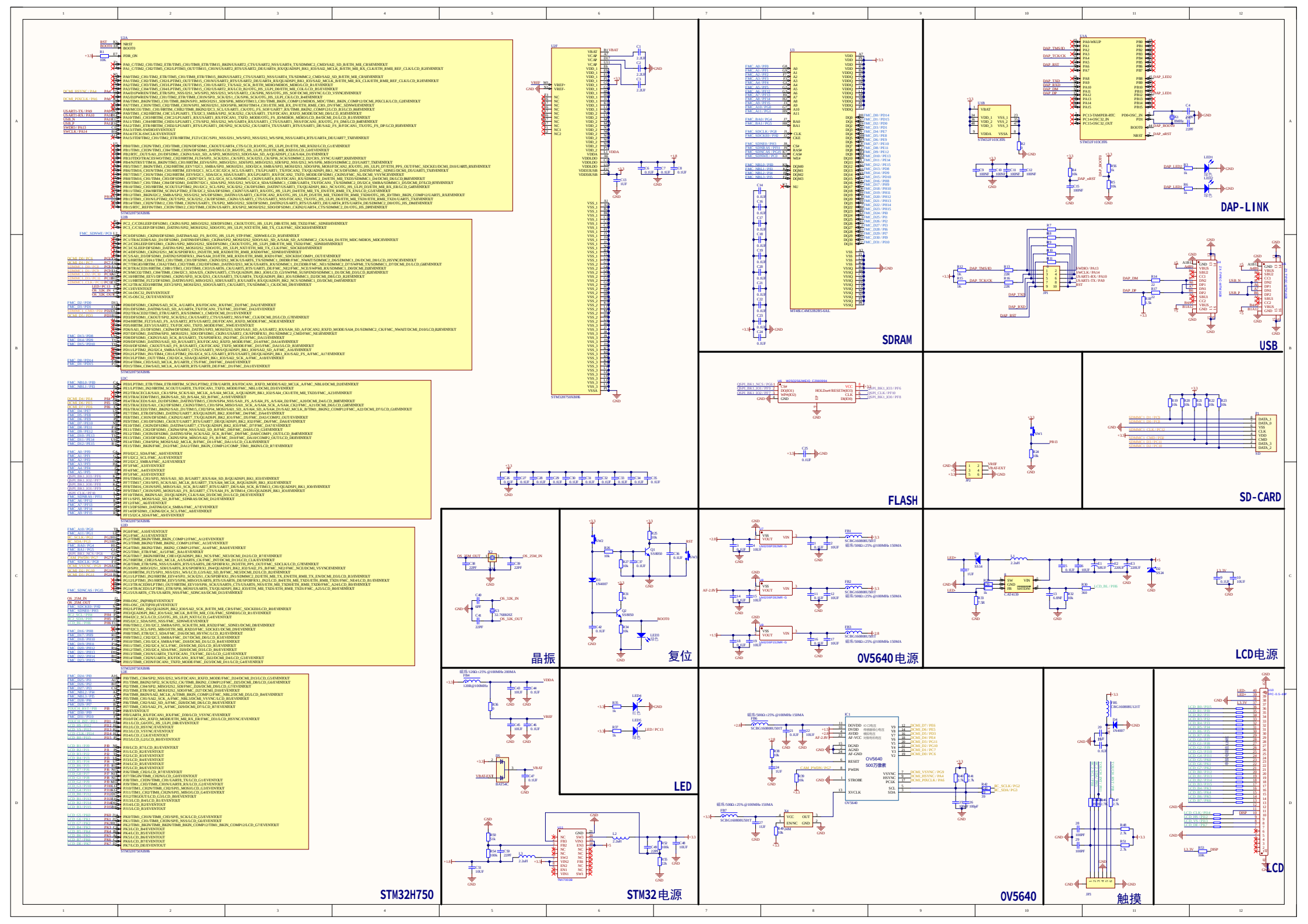
STM32H750
STM32 电源
晶振
复位
LED
OV5640 电源
OV5640
触摸
LCD
FLASH
SDRAM
SD-CARD
USB
DAP-LINK